///// Model No : CA11D34.14

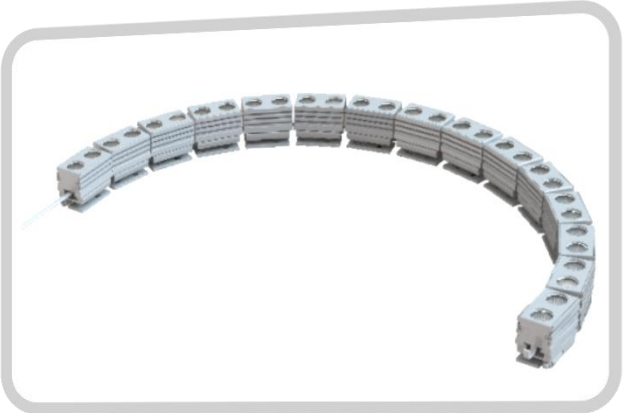

DMX Zigbee 0/1-10 V DALI Bluetooth APP control CASAMBI TRIAC DIM RoHS CE

Features:

- Modular & Slim: 34mm Profile, 56mm Interlock System.
- High-Brightness LEDs — Uniform & Consistent Color.
- Flexible Installation — Quick-Clip or Pivoting Bracket for Any Surface

Normal/RAL series:9002/9006/9011
Custom Colour &Finish

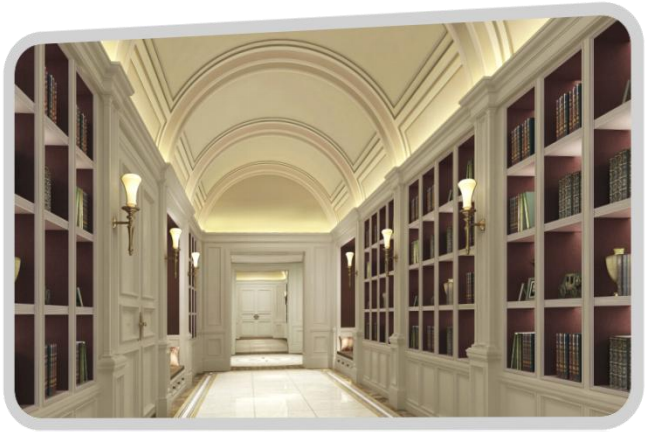

Application:

- It's widely used as a decorative lights, and use it as the lights;
- Stage decoration, festival, exhibition, wedding;
- Backlight of signage, channel letters lighting;
- Landscape layout lighting;

Dimensions:

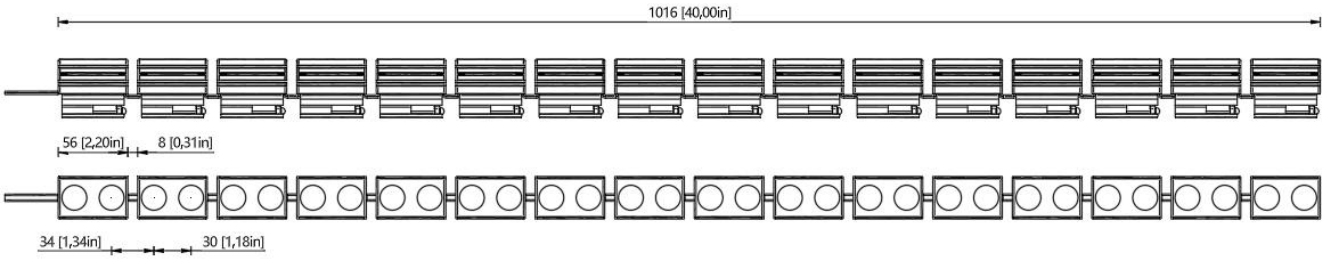

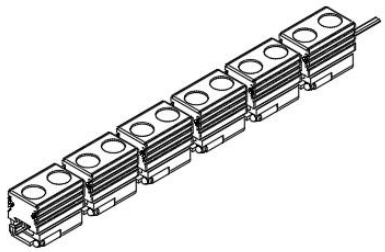

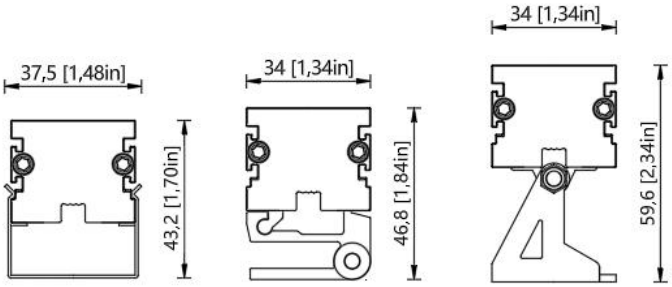

Physical

Housing Material	6063 AviationGrade Aluminum
Lens Material	Tempered glass
End Cap Material	Die cast aluminium
Gasket Material	Silicone
Surface Finish	primer and electrostatically-applied, powder coat paint finish
Weight	/

Electrical and Control

Voltage	DC 24V
Wattage	Max 3w /module
Control	0-10V / DMX / DALI /ON /OF
Inrush Current (Peak)	Meets NEMA-410 requirements (Based on voltage and control specifications, consult factory for details)

Environmental

Storage Temperature	-40 °C to 85 °C
Start-up Temperature	-40 °C to 50 °C
Operating Temperature	For 32.8 W/m fixtures: -40 °C to 50 °C For 72.18 W/m fixtures, CE Certification: -40 °C to 40 °C
Ingress Protection Rating	IP40 (No water, splash or drip protection. For use only in dry indoor environments without liquid exposure).Consult factory for details
Impact Resistance Rating	IK08 （Consult factory for IK08 lens option）

Accessories (OrderSeparately)

Cables	Lumenfacade Leader Cable Lumenfacade Jumper Cable Lumenfacade T-Junction

Optional luminous angle

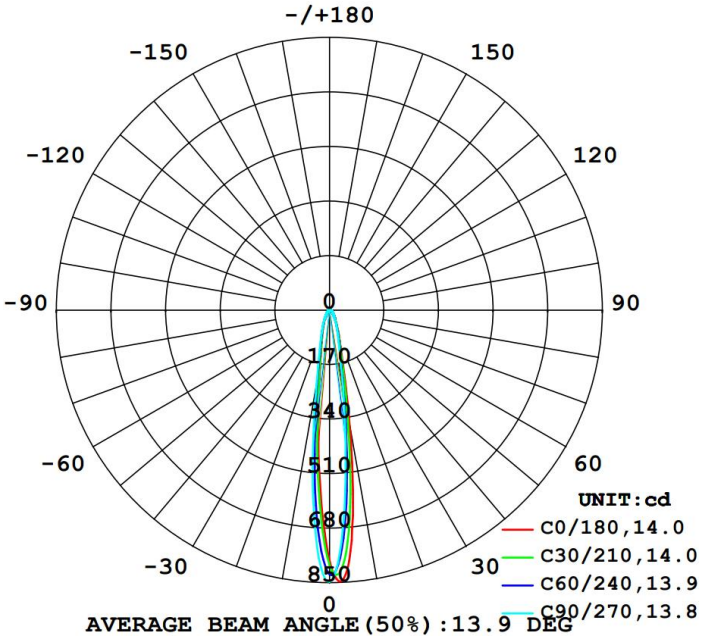

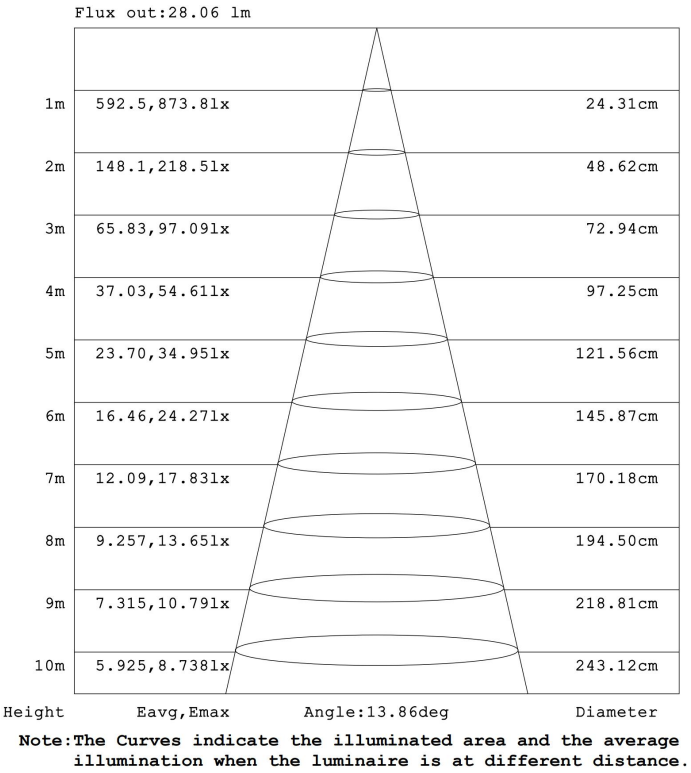

LUMINANCE LIMITATION CURVES

GLARE	CLASS	ILLUMINANCE (lx)							
1.15	A	2000	1000	500	<=300				
1.50	B		2000	1000	500	<=300			
1.85	C			2000	1000	500	<=300		
2.20	D				2000	1000	500	<=300	
2.55	E					2000	1000	500	<=300
		a	b	c	d	e	f	g	h

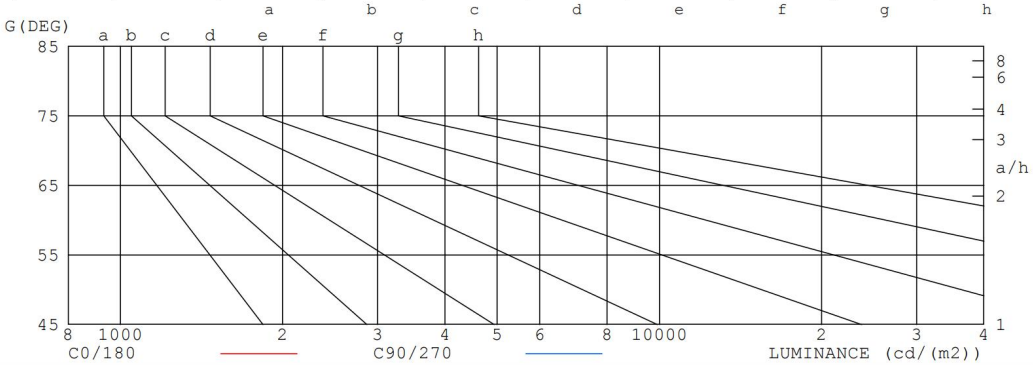

LUMINANCE cd/(m2)		
G(DEG)	C0/180	C90/270
85	12	5
80	10	12
75	10	15
70	13	17
65	14	19
60	16	20
55	18	21
50	21	23
45	25	26

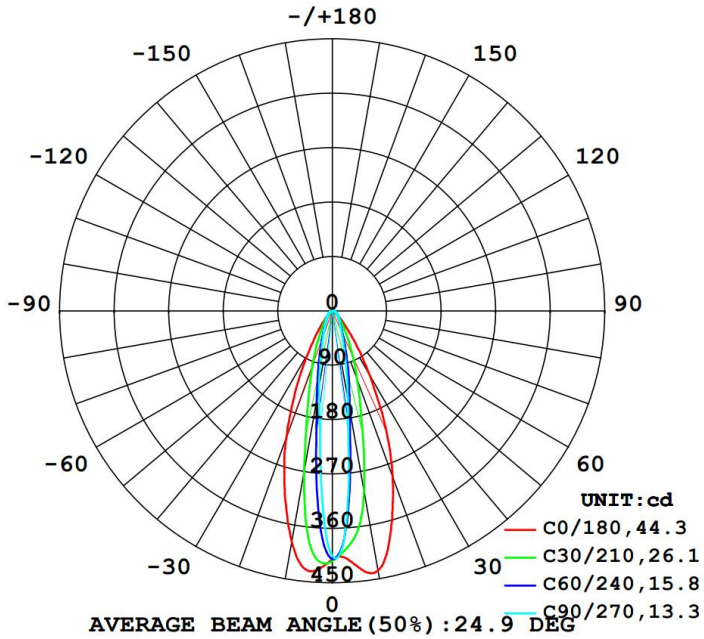

AVERAGE BEAM ANGLE(50%):24.9 DEG

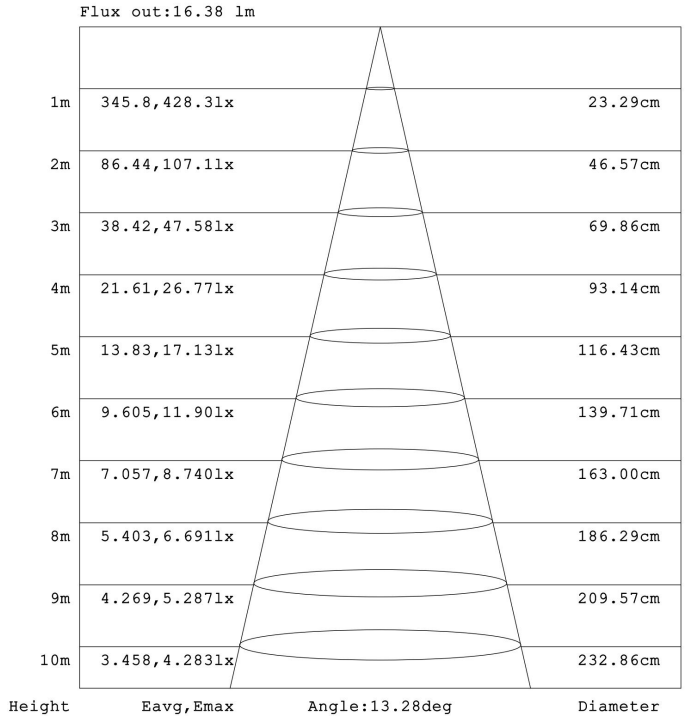

Note:The Curves indicate the illuminated area and the average illumination when the luminaire is at different distance.

LUMINANCE LIMITATION CURVES

GLARE	CLASS	ILLUMINANCE (lx)							
1.15	A	2000	1000	500	<=300				
1.50	B		2000	1000	500	<=300			
1.85	C			2000	1000	500	<=300		
2.20	D				2000	1000	500	<=300	
2.55	E					2000	1000	500	<=300

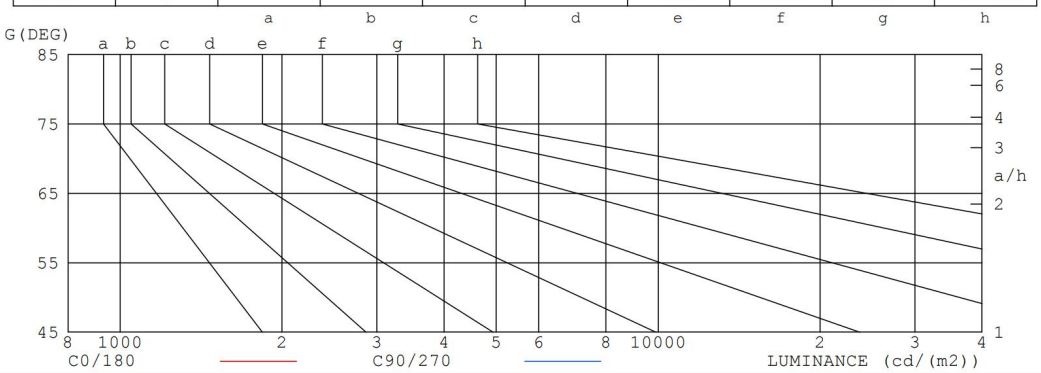

LUMINANCE cd/(m2)		
G(DEG)	C0/180	C90/270
85	14	11
80	11	11
75	10	13
70	13	16
65	14	17
60	16	19
55	18	20
50	23	22
45	36	24

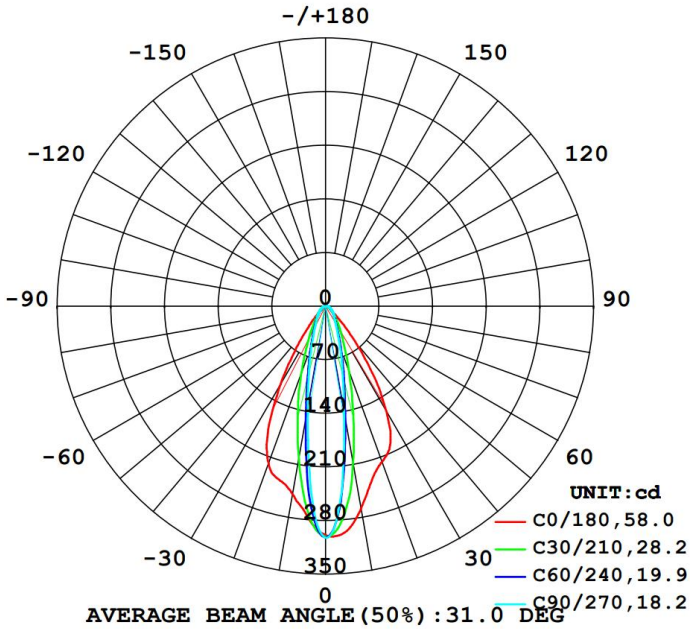

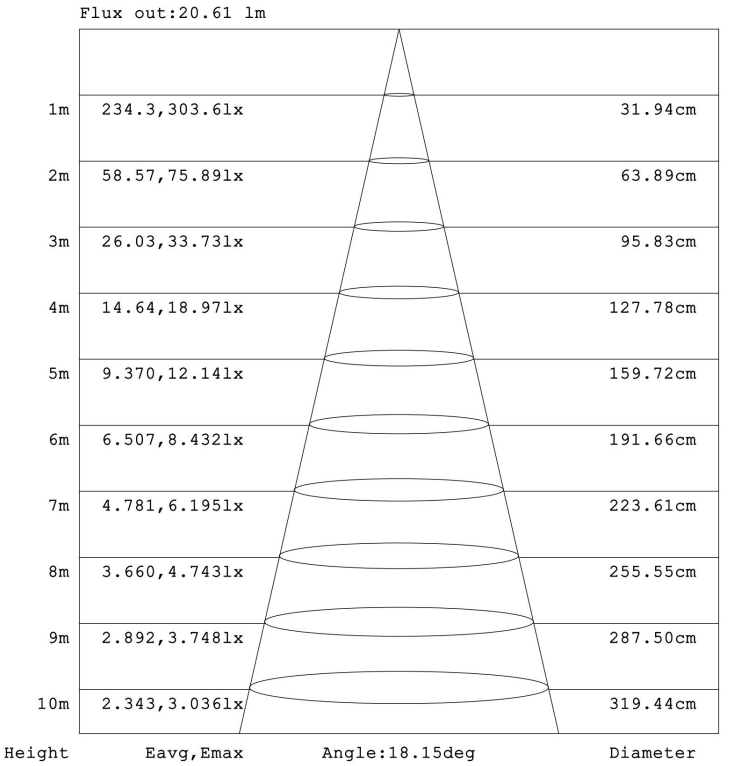

Note:The Curves indicate the illuminated area and the average illumination when the luminaire is at different distance.

LUMINANCE LIMITATION CURVES

GLARE	CLASS	ILLUMINANCE (lx)							
1.15	A	2000	1000	500	<=300				
1.50	B		2000	1000	500	<=300			
1.85	C			2000	1000	500	<=300		
2.20	D				2000	1000	500	<=300	
2.55	E					2000	1000	500	<=300
		a	b	c	d	e	f	g	h

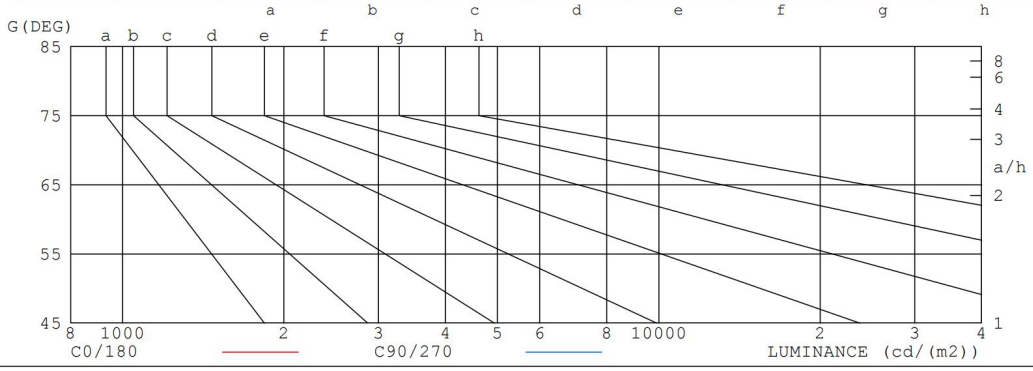

LUMINANCE cd/(m2)		
G(DEG)	C0/180	C90/270
85	16	12
80	13	12
75	12	15
70	15	17
65	17	19
60	18	20
55	19	22
50	25	23
45	52	26

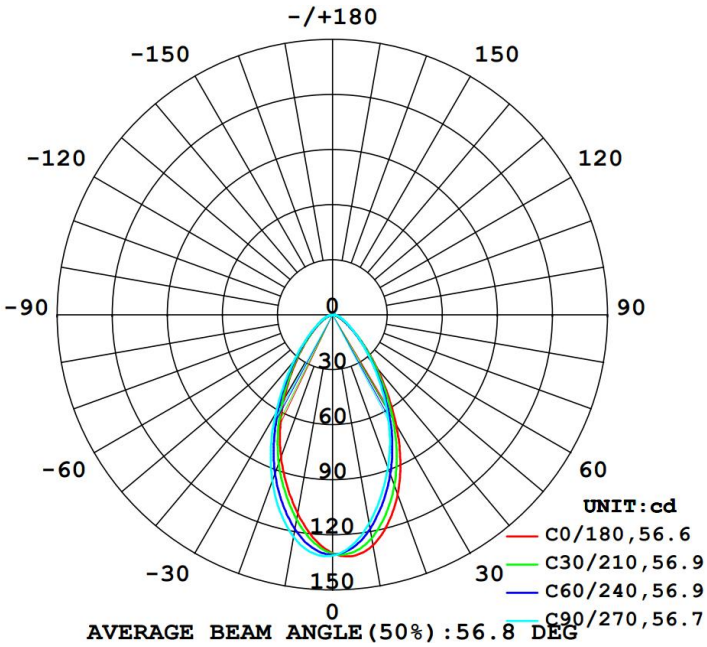

Flux out:71.81 lm

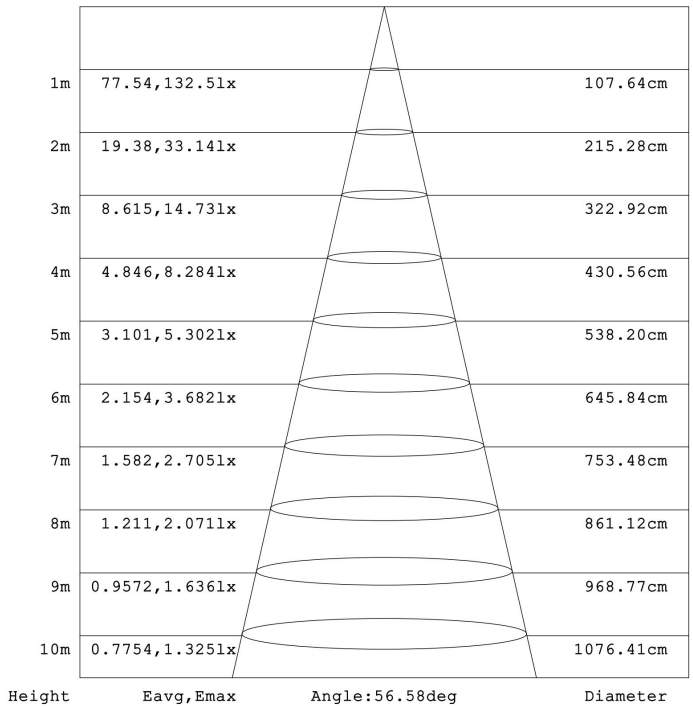

Note:The Curves indicate the illuminated area and the average illumination when the luminaire is at different distance.

LUMINANCE LIMITATION CURVES

GLARE	CLASS	ILLUMINANCE (lx)							
1.15	A	2000	1000	500	<=300				
1.50	B		2000	1000	500	<=300			
1.85	C			2000	1000	500	<=300		
2.20	D				2000	1000	500	<=300	
2.55	E					2000	1000	500	<=300

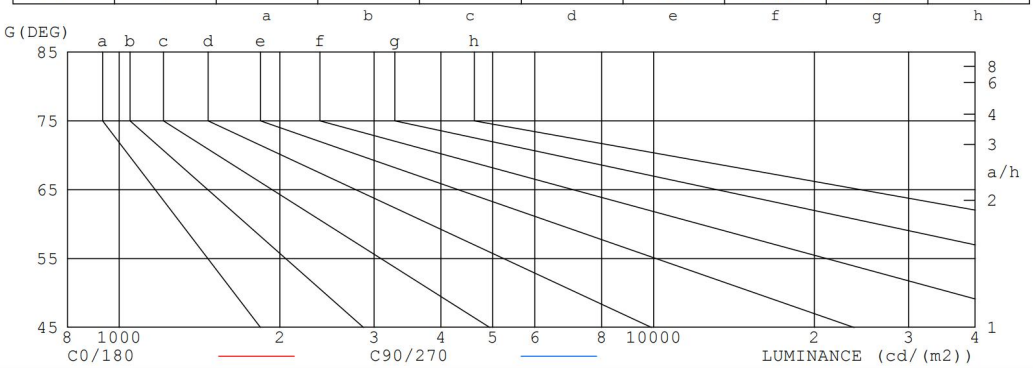

LUMINANCE cd/(m2)		
G(DEG)	C0/180	C90/270
85	10	8
80	9	11
75	9	14
70	11	17
65	15	18
60	19	21
55	24	26
50	33	33
45	46	42

ANTI-GLARE ACCESSORIES (Order Separately)

Asymmetric Louver

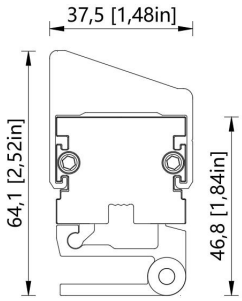

Characteristic analysis:

-Directional glare control, without destroying the wall wash light type: the blade angle of the asymmetric louver matches the asymmetric light distribution curve of the wall wash, only blocks the overflow light and stray light that are sensitive to the human eye, and does not block the effective light beam that directly shines on the wall.
-Reduce the glare value (UGR) and improve visual comfort.

Low partition

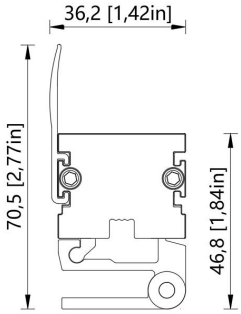

Characteristic analysis:

-Directional light control, reducing glare interference; the short baffle limits the light emission angle through physical occlusion, which can effectively block the stray light andling direct light in the horizontal direction of the luminaire, avoiding the discomfort caused by the direct light to the human eye.
-Without affecting the wall washing effect, the light effect is more pure; it is close to the light emitting surface of the wall washer, and it will not block main light band projected by the luminaire to the wall, avoiding the problems of "light band disconnection" and "dark area" that are prone to occur with high baff.

High-Profile Baffle

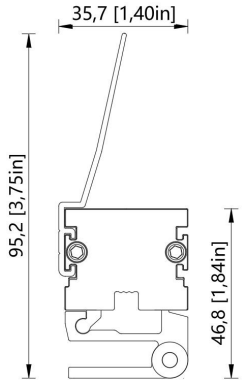

Characteristic analysis:

-"Strong anti-glare wide range of light control", more suitable for scenarios with strict requirements for glare control and deep constraints on
-Ultimate anti-glare, reduce light pollution; precise light control, avoid light overflow; enhance light and dark contrast, highlight the level of light and.

CA11D34.P56
(U stainless steel buckle)

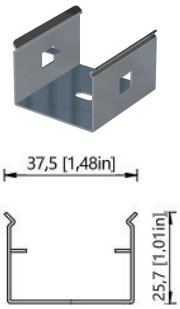

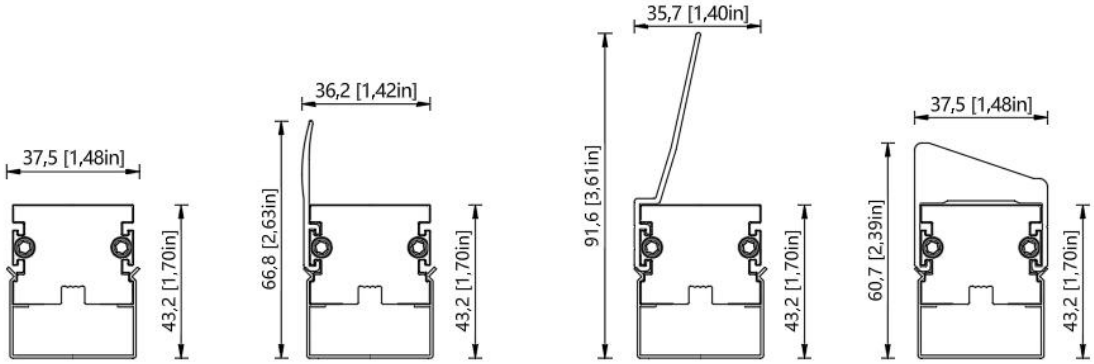

Characteristic analysis:

-Advantages: simple structure, low cost, quick installation (usually with slot wall washing lamp), simple appearance and corrosion -resistance of stainless steel.
Common styles: mostly flat base, fixed on the wall with screws, and the lamp body is directly clamped or buckled.

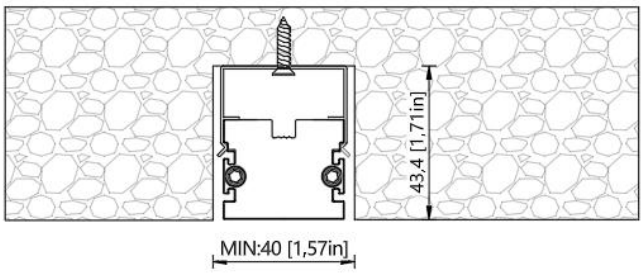

CA11D34.P57
(Rotating aluminum bracket (low model))

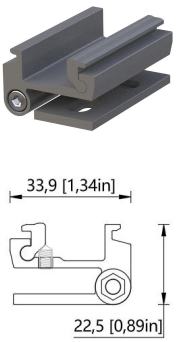

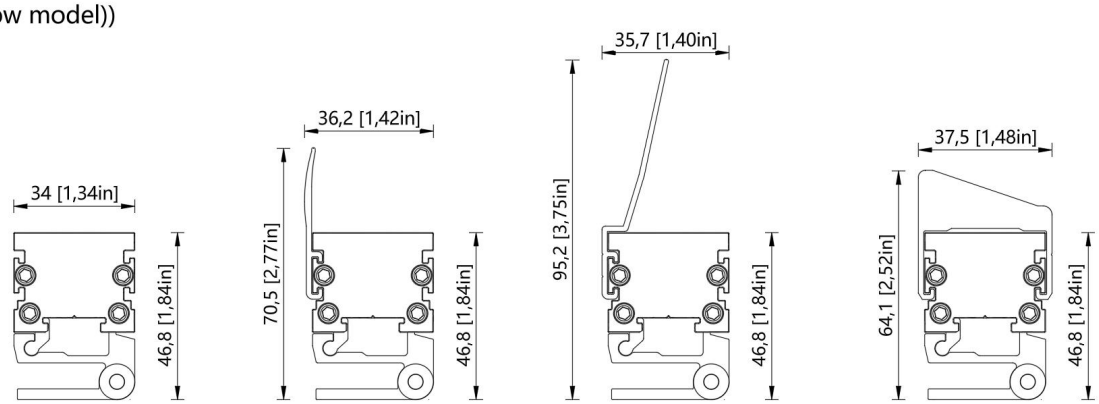

Characteristic analysis:

-Advantages: simple structure, low cost, quick installation (usually with slot wall washing lamp), simple appearance and corrosion -resistance of stainless steel.
Common styles: mostly flat base, fixed on the wall with screws, and the lamp body is directly clamped or buckled.

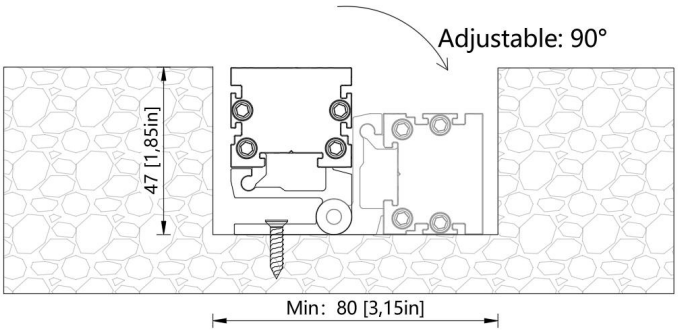

CA11D34.P53
(Simple rotary aluminum bracket)

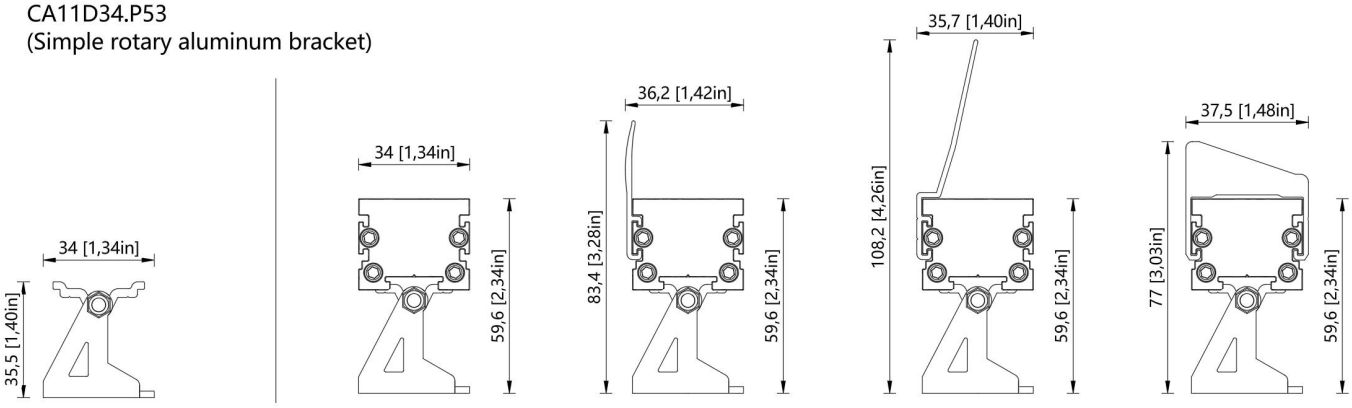

Characteristic analysis:

-Advantages: the core advantage is "universal adjustment", which has the adjustable range in horizontal and vertical directions (usually 15 ~ 30) and has strong adaptability. Aluminum is light and corrosion-resistant.
-The installation surface and the illuminated wall surface are not in the same plane, and there are obstacles in the middle or gaps need to be crossed.
-

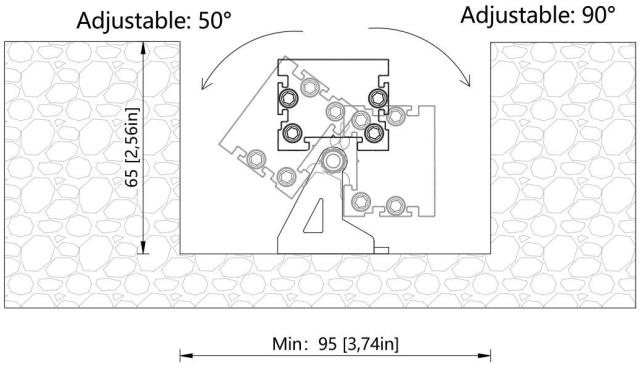

Plastic lawn lamp pole

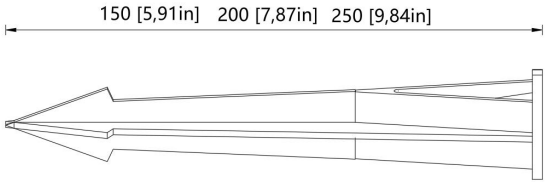

Minimum bending size

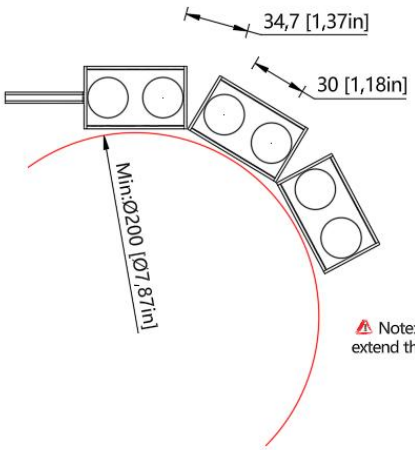

Note: If you need a smaller radius, you need to extend the connecting line between lamps.

Spacing custom size

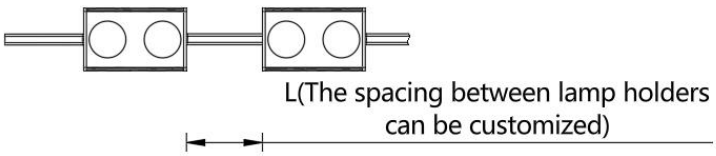

Description of DMX512 Lamp Power Supply/Controller Connection (Lamp External Decoder Scheme)

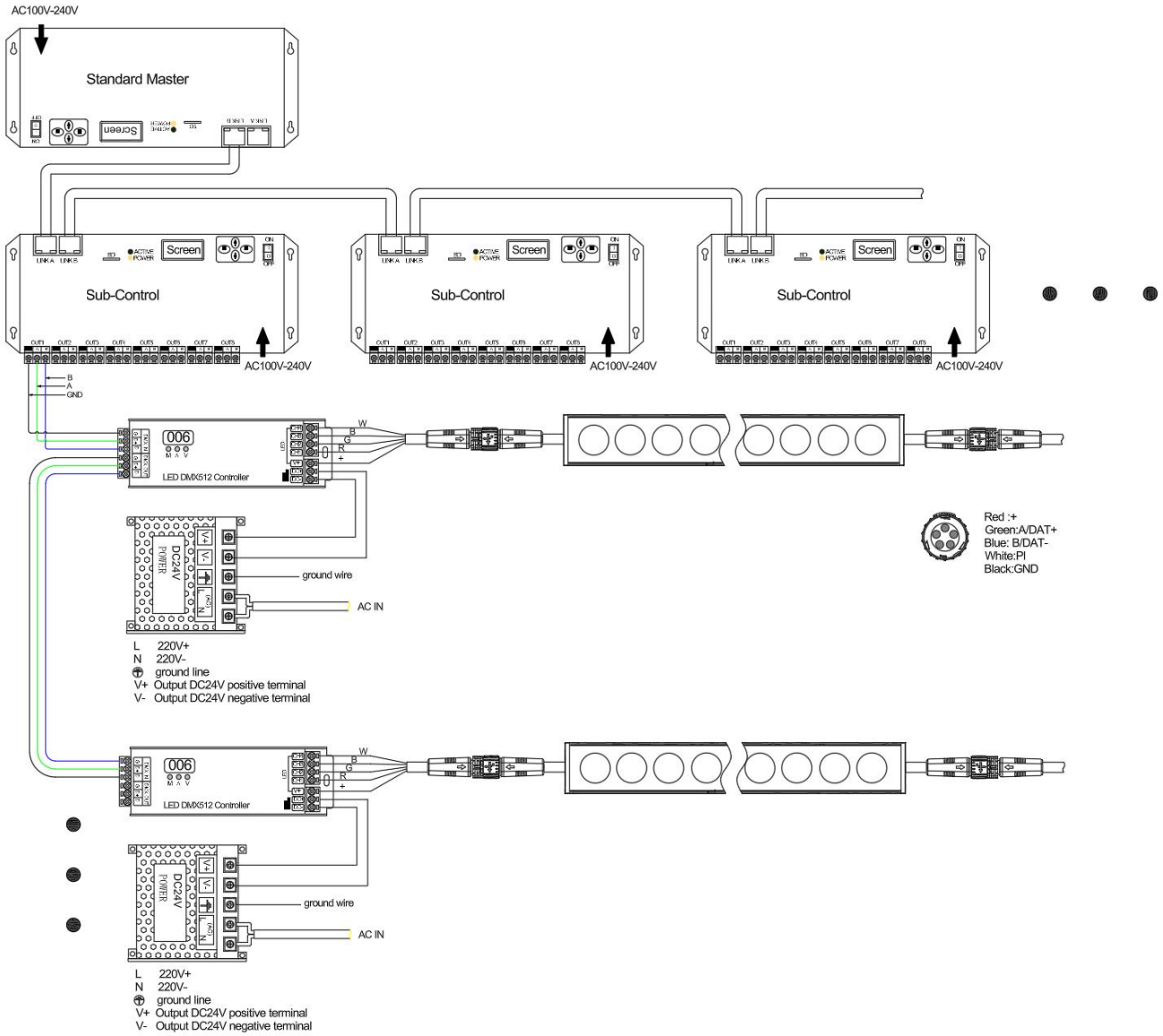

er

r,

on.

connected in series.

2. The decoder is connected with the driving power supply:
Read the instructions of the decoder and the driving power supply carefully, and confirm that the control protocol matches (PWM or 0-10V). Connect the control output (such as PWM+, PWM-) of the decoder to the dimming input (such as DIM+DIM-) of the driving power supply. The polarity must be correct.

3. The driving power supply is connected with the lamp:
Connect the DC output (V+, V-) of the driving power supply to the input terminal of the lamp. Attention should be paid to the voltage and polarity, the reverse connection will damage the LED.

4. Power supply:
High-voltage part: Connect the input terminals (L, N, PE) of the driving power supply to the mains correctly. Make sure the grounding is good.
Weak current part: Provide the required working voltage (such as DC12V) for the decoder itself. Note that this power supply is isolated from the control signal.

0/1-10V Lamp Power Supply/Dimmer Connection Description

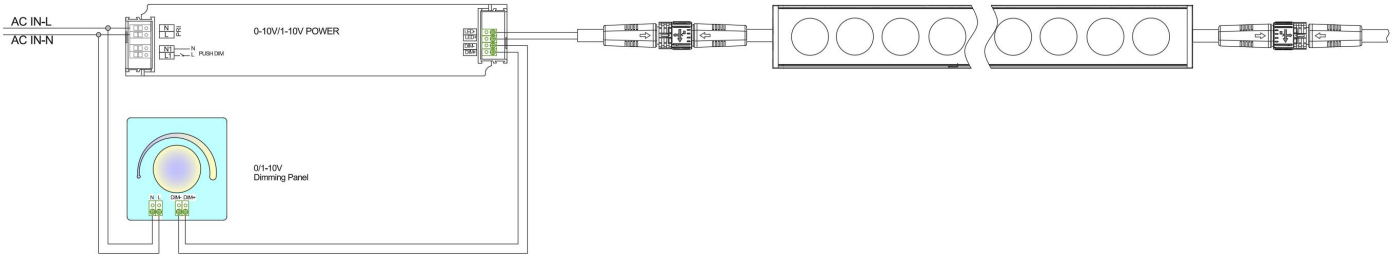

1. The signal line is separated from the power line
It is absolutely forbidden to arrange the dimming signal line (V+/-) and the AC power line (L/N) in the same conduit or trunking, nor to use the same set of multi-core cables. The electromagnetic interference of AC power supply will seriously interfere with the weak 0-10V DC signal, resulting in flickering, jitter or uneven dimming of lights.
Best practice: Using shielded twisted pair as dimming light and grounding the shielding layer at one end of the driver can effectively suppress interference.
2. Distinguish between 0-10V and 1-10V:
When buying drives and controllers, you need to confirm their specifications. They can be used together, but their behaviors are different:
1-10V controller +0-10V driver: When the dimming knob is adjusted to the lowest level, the voltage is 1V, and the lamp will not be completely turned off, and it will remain about 10% dim.
When the dimming knob is adjusted to the lowest voltage, the driver will judge that the signal is lost, and the lamp 0-10V controller +1-10V driver: may be completely turned off or flicker.
. When designing, if "off to off" is needed, 1-10V system should be selected.
3. Load capacity and wiring distance:
The output channel of each dimming controller has the maximum load capacity (for example, the minimum load current is 0.1mA and the maximum load current is 2mA). How many drivers can a controller take depends on whether the sum of the input currents of all drivers' DIM ports can exceed the controller capacity. The signal line should not be too long, and it is recommended not to exceed 50 meters. Too long will lead to line voltage drop, so that the actual voltage reaching the driver is lower than the output voltage of the controller, which will affect the dimming consistency.
4. Common ground problem
In some complex systems, if the DIM- terminal potentials of multiple drivers are inconsistent, it may cause interference. This problem can be avoided by ensuring that all signal loops use the dimming controller with isolation function well.
5. Power-on sequence:
The system should follow the correct power-on sequence: first turn on the main power supply, so that the driver and controller can get power, and then perform dimming operation. A sudden full voltage signal may impact the driver.
6. Compatibility and testing:
Different brands of drives and controllers may have subtle compatibility problems. Before the installation of large-scale projects, samples must be tested and inspected. Prove the smoothness, minimum brightness and flicker of dimming curve.

Wiring diagram of DALI digital lighting system

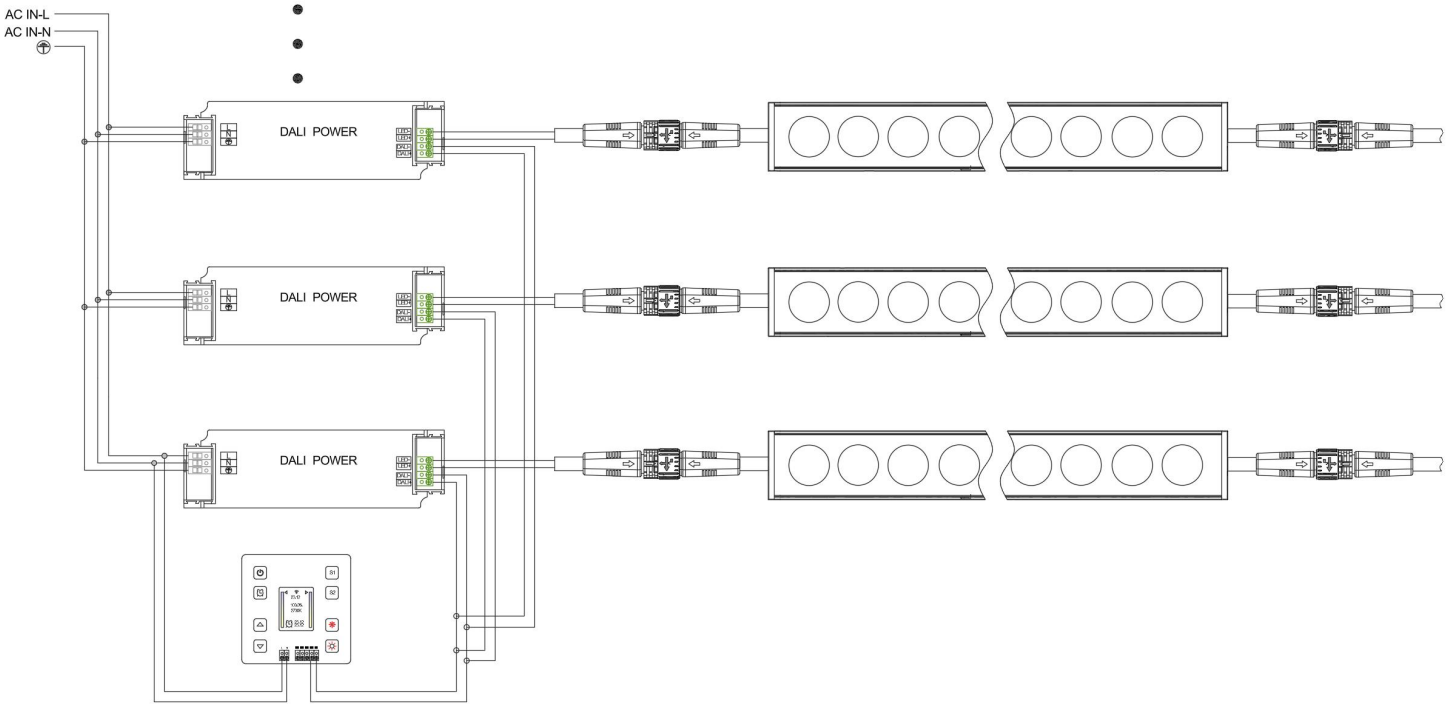

1. Laying bus: use twisted pair to connect DALI+ and DALI- terminals of all equipment (well connection).
2. Connect the power supply: Connect the only DALI system power supply to the bus.
3. Access control: connect the controller, panel and sensor to the bus.
4. Connect the driver with the load: connect the AC power supply (L,N) and DALI bus for each driver, and connect the lamps with its output.
5. Power-on debugging: Use DALI debugging software to allocate short url for each device, and group and set the scene.